ISOLOC MULTI***DAM***® MD-4axis

High Stability In All
Spatial Directions.

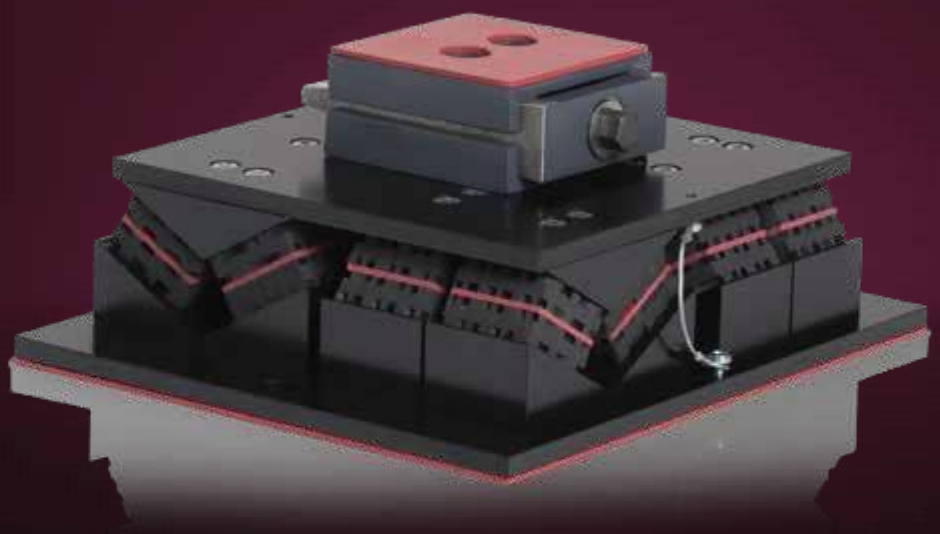

HIGH STABILITY IN ALL SPATIAL DIRECTIONS

The new patented isoloc MULTIDAM® machine mounting system is ideally suited for vibration insulated setup of machines with high dynamics. Due to the special arrangement of the 8 respectively 16 inclined contact surfaces, force exciters in all spatial directions are better absorbed than in conventional elements and are transmitted in a considerably reduced way in the ground (source insulation).
This enables a highly-efficient vibration insulation, especially in machines with dynamic mass forces, e.g. 5-axis processing centres. By the opposite facing, inclined double contact surfaces of the elastomer springs, these are forcibly actuated. The machines stand calmer and more stable - a considerable benefit of this construction.

INCLINED ELASTOMER SPRINGS

By inclination of the elastomer springs shear load and pressure load are „combined". Since elastomer springs subjected to pressure load are mostly "softer" by the factor 2-3 in horizontal than in vertical direction, on one side this can be used to reduce the vertical natural frequencies f_{0z} of the elastomer springs and at the same time to increase the horizontal natural frequencies f_{0x} und f_{0y}, which stabilise the positioned machine.

In general the ratio between the vertical and horizontal natural frequency is:

· In standard elements f_{0z} / f_{0xy} ~ 3 – 2
· In isoloc MULTIDAM f_{0z} / f_{0xy} ~ 1 – 1.5

ADVANTAGES

Almost the same vertical and horizontal stiffness. Very high damping (up to 30 %), excellent vibration, structure-borne sound and shock insulation. Free or screwed-on installation in connection with the isoloc UMS Universal Precision Machine Shoes.

YOUR BENEFIT

· Better dynamic characteristics of the machines by less vibration amplitudes in horizontal direction.
· Calm machine standing.
· Setting of higher jerk and accelerations possible.
· Higher productivity.
· Better work piece surfaces.
· Lower wear-and-tear of machines and tools.
· Reduced vibrations and noise in the production halls.

MULTI***DAM***® MD-4axis Equipment & Dimensions

EQUIPMENT MULTI*DAM* MD-4AXIS WITHOUT UMS

	Art.-No.	Type	F max¹
IPL 6	840806	MD4-8LP/6	6 000
	841606	MD4-16LP/6	12 000

Natural frequencies f	σ_D	f_{0x}*	f_{0y}*
0.10	17	10	10
0.15	16	9	9
0.20	15	8	8
0.25	15	8	8
0.30	15	8	8

	Art.-No.	Type	F max¹
IPL 10	840810	MD4-8LP/10	10 000
	841610	MD4-16LP/10	20 000

Natural frequencies f	σ_D	f_{0x}*	f_{0y}*
0.10	32	18	18
0.20	23	13	13
0.30	22	12	12
0.40	19	11	11
0.50	18	10	10

	Art.-No.	Type	F max¹
IPL 17	840817	MD4-8LP/17	40 000
	841617	MD4-16LP/17	80 000

Natural frequencies f	σ_D	f_{0x}*	f_{0y}*
0.40	31	19	19
0.80	27	16	16
1.20	25	14	14
1.60	24	13	13
2.00	23	13	13

	Art.-No.	Type	F max[1]
IPK 62	8408062	MD4-8LP/62	6 000
	8416062	MD4-16LP/62	12 000

Natural frequencies f	σ_D	f_{0x}*	f_{0y}*
0.10	12	8	8
0.15	11	7	7
0.20	10	6	6
0.25	10	6	6
0.30	10	6	6

	Art.-No.	Type	F max[1]
IPK 102	8408102	MD4-8LP/102	10 000
	8416102	MD4-16LP/102	20 000

Natural frequencies f	σ_D	f_{0x}*	f_{0y}*
0.10	22	14	14
0.20	16	10	10
0.30	13	8	8
0.40	12	7	7
0.50	11	7	7

	Art.-No.	Type	F max[1]
IPK 172	8408172	MD4-8LP/172	40 000
	8416172	MD4-16LP/172	80 000

Natural frequencies f	σ_D	f_{0x}*	f_{0y}*
0.40	21	14	14
0.80	17	11	11
1.20	15	10	10
1.60	15	9	9
2.00	15	8	8

DIMENSIONS MULTI***DAM*** MD-4AXIS WITHOUT UMS

	Type		L x B**	l**	b**	h**	d1**	d2**	a**	α
IPL	MD4	8LP	250 x 210	180	180	76	M16	18	214	30º
	MD4	16LP	340 x 290	250	250	76	M16	18	304	30º
IPK	MD4	8LP	250 x 210	180	180	96	M16	18	214	30º
	MD4	16LP	340 x 290	250	250	96	M16	18	304	30º

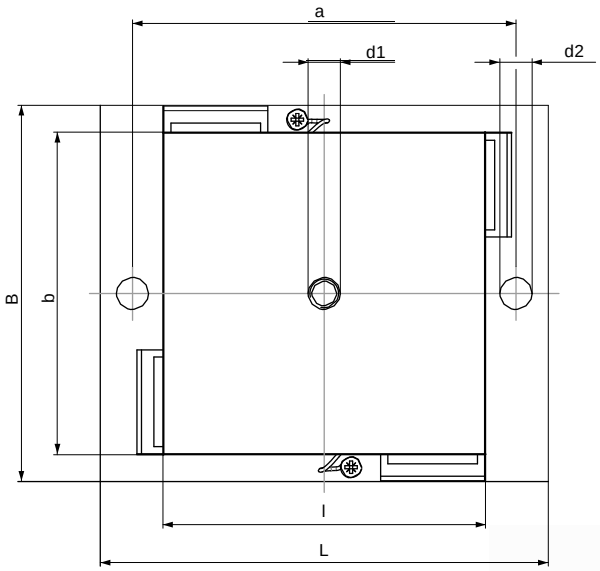

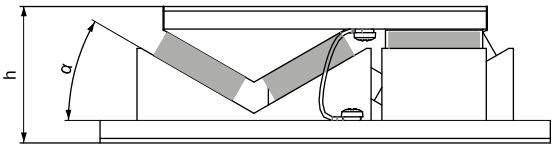

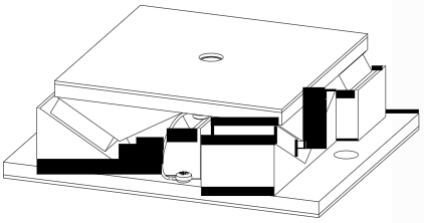

[1] F max in N (→σ_D=maximal)
* Deviation of the values ±15-25 %
** All dimensions in mm
σ_D Compressive stress N/mm²
f_{0z} Vertical natural frequency in Hz
f_{0x} Horizontal natural frequency in Hz in x-direction
f_{0y} Horizontal natural frequency in Hz in y-direction

EQUIPMENT MULTIDAM MD-4-AXIS WITH UMS

	Art.-No.	Type	F max[1]
IPL 6	840806A	MD4-8LP/UMS5/6	6 000
	841606A	MD4-16LP/UMS5/6	12 000

Natural frequencies f

σ_D	f_{0z}*	f_{0x}*	f_{0y}*
0.10	17	10	10
0.15	16	9	9
0.20	15	8	8
0.25	15	8	8
0.30	15	8	8

	Art.-No.	Type	F max[1]
IPL 10	840810A	MD4-8LP/UMS5/10	10 000
	841610A	MD4-16LP/UMS5/10	20 000

Natural frequencies f

σ_D	f_{0z}*	f_{0x}*	f_{0y}*
0.10	32	18	18
0.20	23	13	13
0.30	22	12	12
0.40	19	11	11
0.50	18	10	10

	Art.-No.	Type	F max[1]
IPL 17	840817A	MD4-8LP/UMS5/17	40 000
	841617B	MD4-16LP/UMS8/17	80 000

Natural frequencies f

σ_D	f_{0z}*	f_{0x}*	f_{0y}*
0.40	31	19	19
0.80	27	16	16
1.20	25	14	14
1.60	24	13	13
2.00	23	13	13

	Art.-No.	Type	F max[1]
IPK 62	8408062A	MD4-8LP/UMS5/62	6 000
	8416062A	MD4-16LP/UMS5/62	12 000

Natural frequencies f

σ_D	f_{0z}*	f_{0x}*	f_{0y}*
0.10	12	8	8
0.15	11	7	7
0.20	10	6	6
0.25	10	6	6
0.30	10	6	6

	Art.-No.	Type	F max[1]
IPK 102	8408102A	MD4-8LP/UMS5/102	10 000
	8416102A	MD4-16LP/UMS5/102	20 000

Natural frequencies f

σ_D	f_{0z}*	f_{0x}*	f_{0y}*
0.10	22	14	14
0.20	16	10	10
0.30	13	8	8
0.40	12	7	7
0.50	11	7	7

	Art.-No.	Type	F max[1]
IPK 172	8408172A	MD4-8LP/UMS5/172	40 000
	8416172B	MD4-16LP/UMS8/172	80 000

Natural frequencies f

σ_D	f_{0z}*	f_{0x}*	f_{0y}*
0.40	21	14	14
0.80	17	11	11
1.20	15	10	10
1.60	15	9	9
2.00	15	8	8

DIMENSIONS MULTI***DAM*** MD-4-AXIS WITH UMS

	Type	L x B**	l**	b**	h**	V** adjustment range	d_1**	d_2**	d_3**	a**	c**	L1**	L2**	L3**	k**	a	SW3**
IPL	MD4-8LP/UMS5-ASF	250 x 210	180	180	126	+5 / –4	M16	22	18	214	36	110	110	145	13	30°	17
	MD4-16LP/UMS5-ASF	340 x 290	250	250	126	+5 / –4	M16	22	18	304	36	110	110	145	13	30°	17
	MD4-16LP/UMS8-ASF	340 x 290	250	250	132	+6 / –4	M16	22	18	304	52	144	150	185	13	30°	22
IPK	MD4-8LP/UMS5-ASF	250 x 210	180	180	147	+5 / –4	M16	22	18	214	36	110	110	145	13	30°	17
	MD4-16LP/UMS5-ASF	340 x 290	250	250	147	+5 / –4	M16	22	18	304	36	110	110	145	13	30°	17
	MD4-16LP/UMS8-ASF	340 x 290	250	250	153	+6 / –4	M16	22	18	304	52	144	150	185	13	30°	22

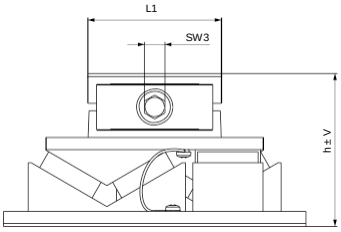

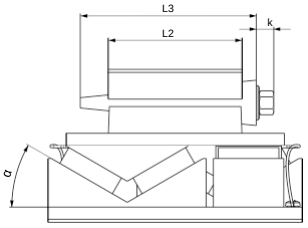

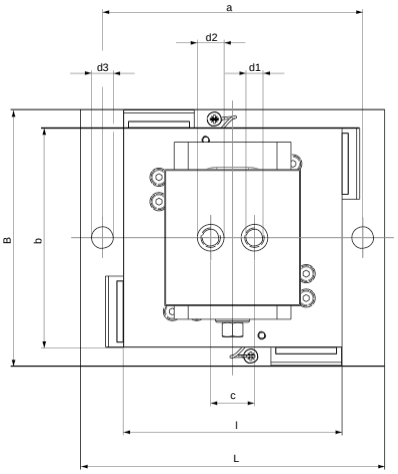

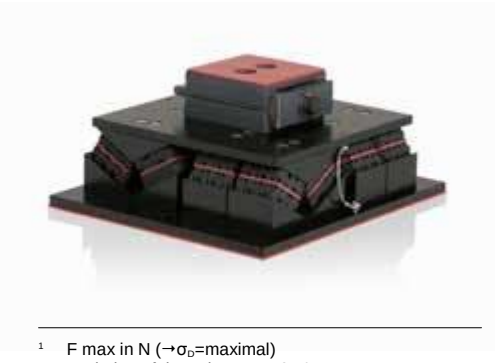

[1] F max in N (→σ_D=maximal)
* Deviation of the values ±15-25 %
** All dimensions in mm
σ_D Compressive stress N/mm²
f_{0z} Vertical natural frequency in Hz
f_{0x} Horizontal natural frequency in Hz in x-direction Horizontal natural frequency in Hz in y-direction

isoloc Product Catalogue 6

Product photography:
Michael Joos, Stuttgart

All other illustrations:
isoloc Schwingungstechnik GmbH

Design:
75a, Büro für Gestaltung, Stuttgart
www.75a.de

© 2016 isoloc Schwingungstechnik GmbH

Subject to technical modifications and error 09.2016/US/1500

isoloc Schwingungstechnik GmbH
Motorstrasse 64, D-70499 Stuttgart
(Industrial Area Weilimdorf)

Further information on: www.isoloc.de